HIRDLS

SW-HIR-2018

HIGH RESOLUTION DYNAMICS LIMB SOUNDER

Originator: C. Craig

Date: 2011-09-30

Subject/Title: HIRDLS High Level Data Flow

Description/Summary/Contents

Keywords:

Purpose of this Document:

Oxford University
Atmospheric, Oceanic & Planetary Physics
Parks Road
OXFORD OXI 3PU
United Kingdom

University of
Colorado, Boulder
Center for Limb
Atmospheric
Sounding
3450 Mitchell Lane,

EOS

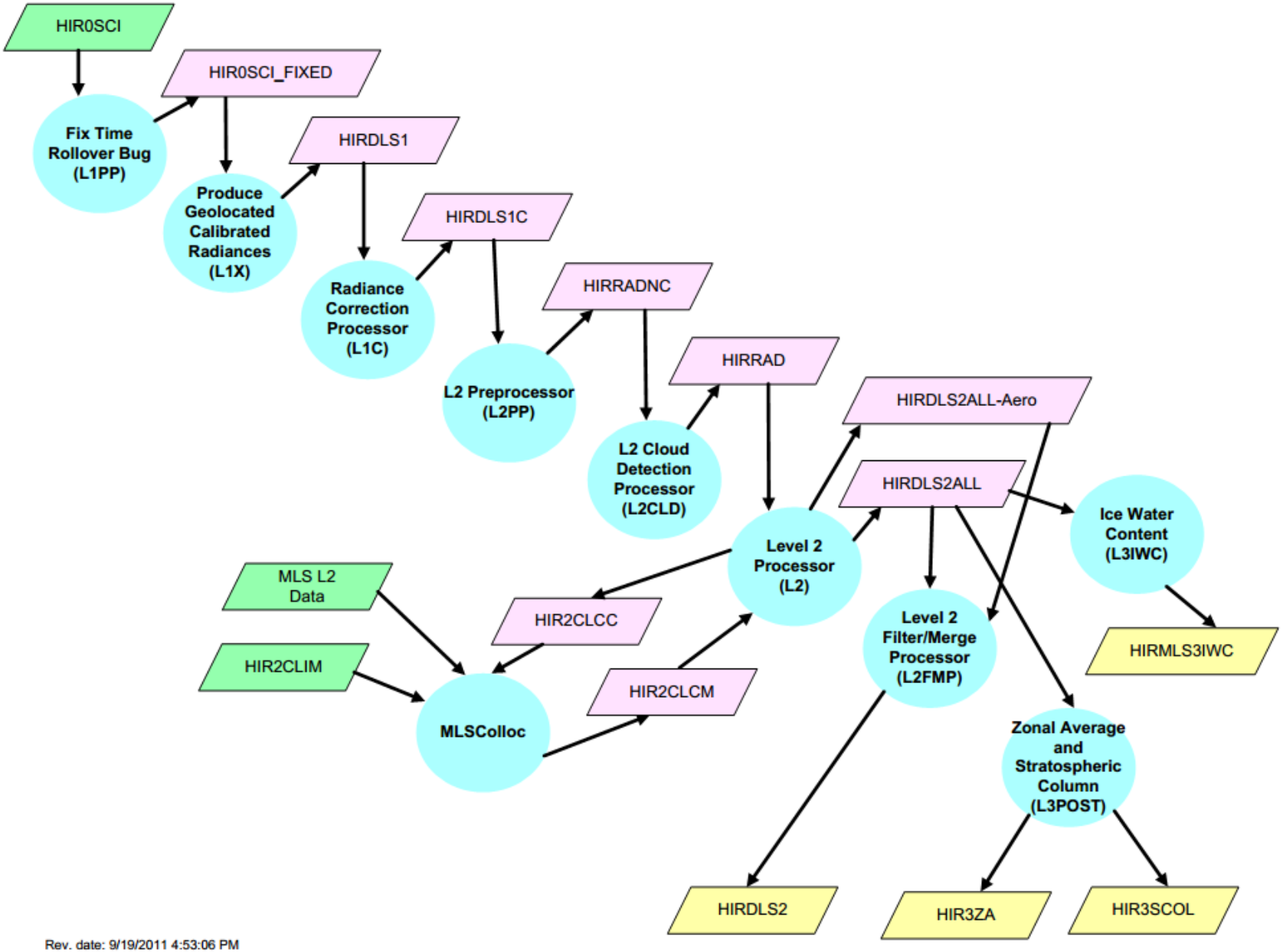

Rev. date: 9/19/2011 4:53:06 PM

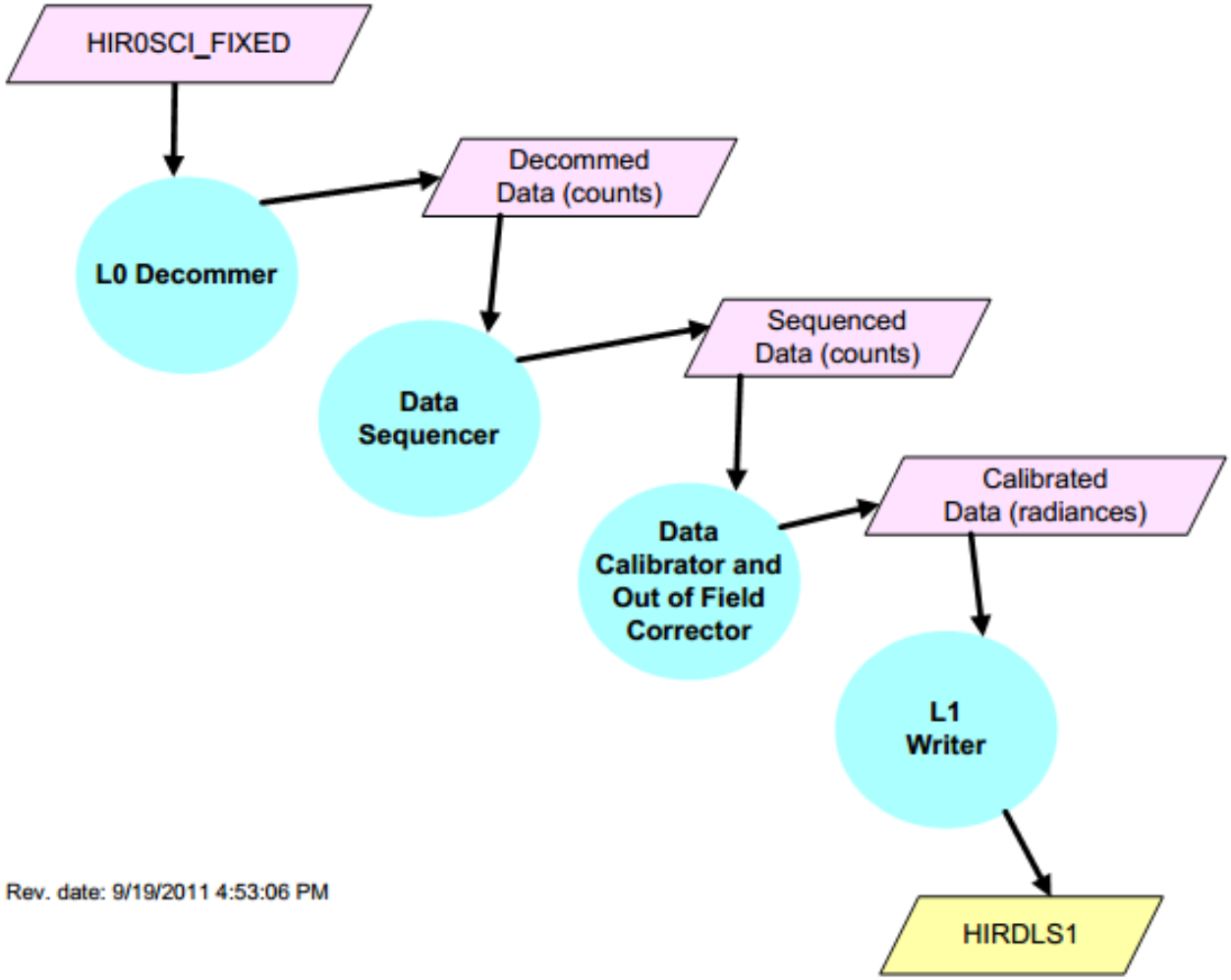
HIR0SCI_FIXED
L0 Decommer
Decommed Data (counts)
Data Sequencer
Sequenced Data (counts)
Data Calibrator and Out of Field Corrector
Calibrated Data (radiances)
L1 Writer
HIRDLS1
Rev. date: 9/19/2011 4:53:06 PM

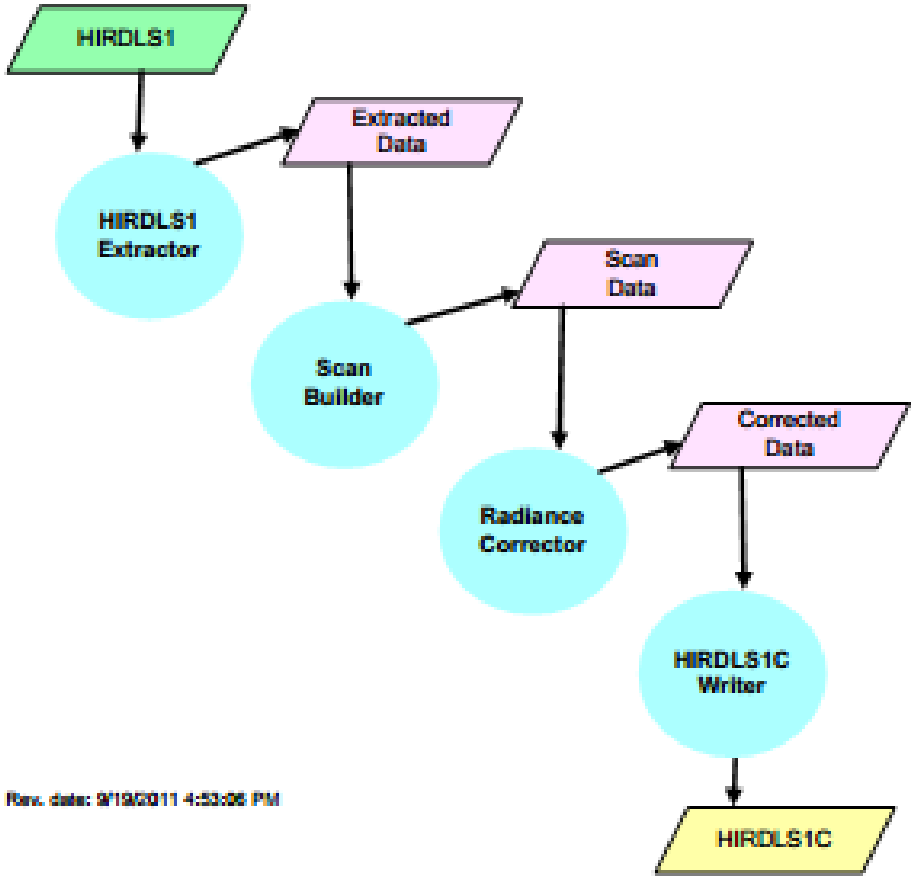
HIRDLS1
Extracted Data
HIRDLS1 Extractor
Scan Data
Scan Builder
Corrected Data
Radiance Corrector
HIRDLS1C Writer
Rev. date: 9/19/2011 4:53:06 PM
HIRDLS1C

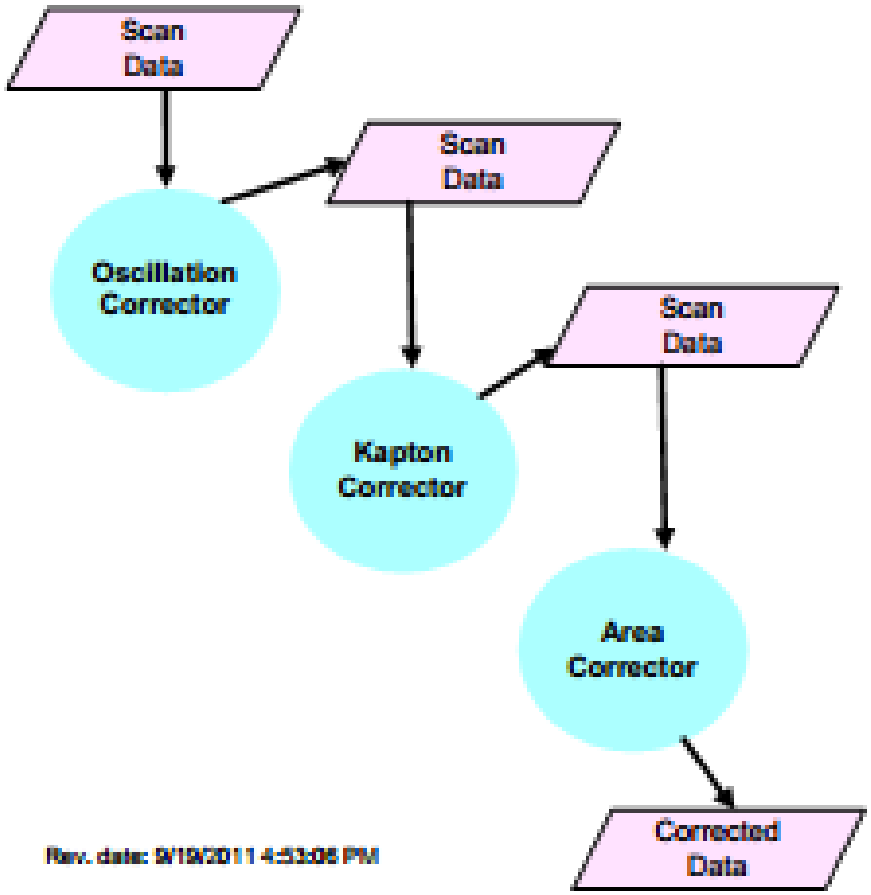
Scan
Data
Oscillation
Corrector
Scan
Data
Kapton
Corrector
Scan
Data
Area
Corrector
Corrected
Data
Rev. date: 9/19/2011 4:53:06 PM

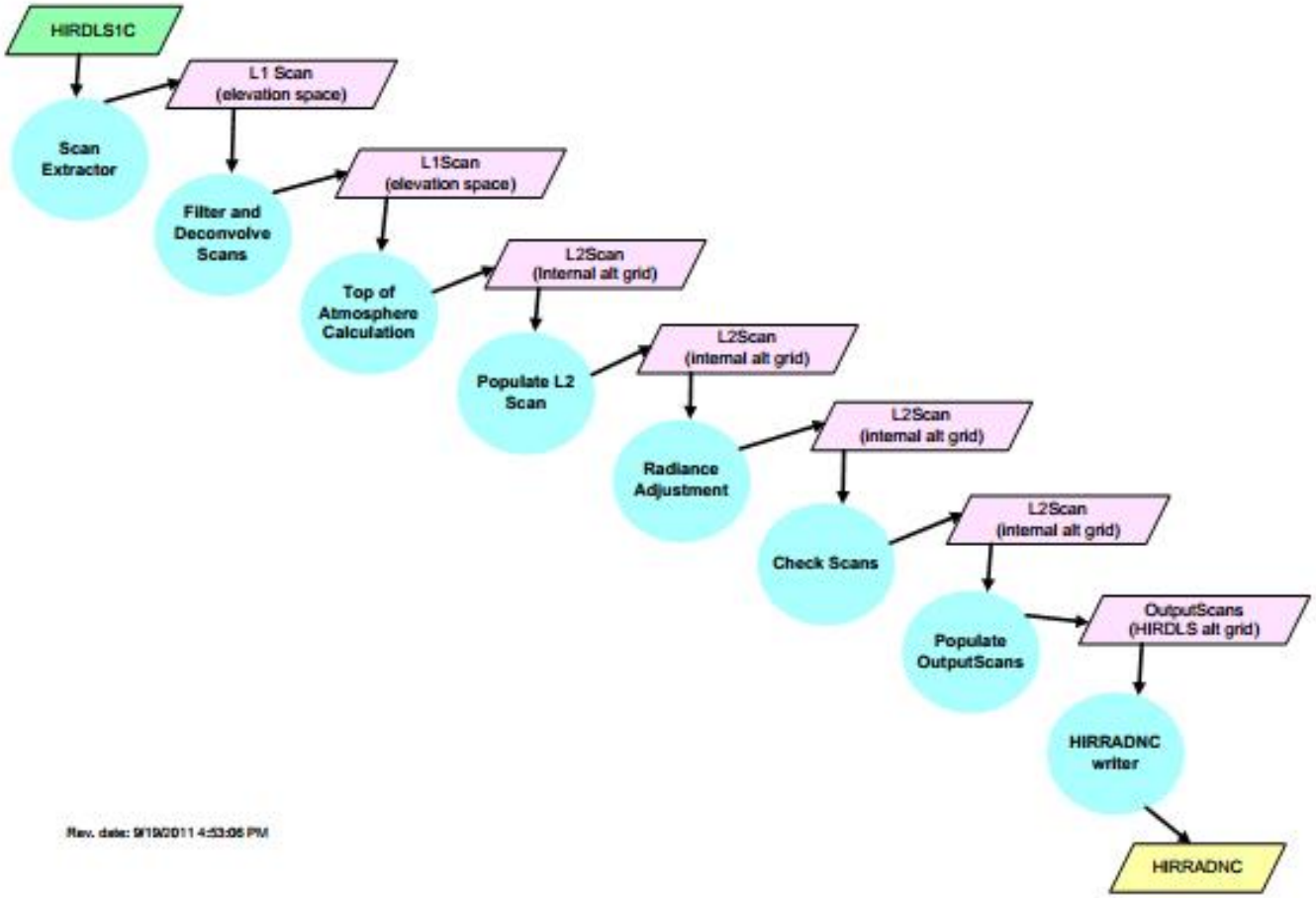
HIRDLS1C
Scan Extractor
L1 Scan (elevation space)
Filter and Deconvolve Scans
L1Scan (elevation space)
Top of Atmosphere Calculation
L2Scan (internal alt grid)
Populate L2 Scan
L2Scan (internal alt grid)
Radiance Adjustment
L2Scan (internal alt grid)
Check Scans
L2Scan (internal alt grid)
Populate OutputScans
OutputScans (HIRDLS alt grid)
HIRRADNC writer
HIRRADNC
Rev. date: 9/19/2011 4:53:06 PM

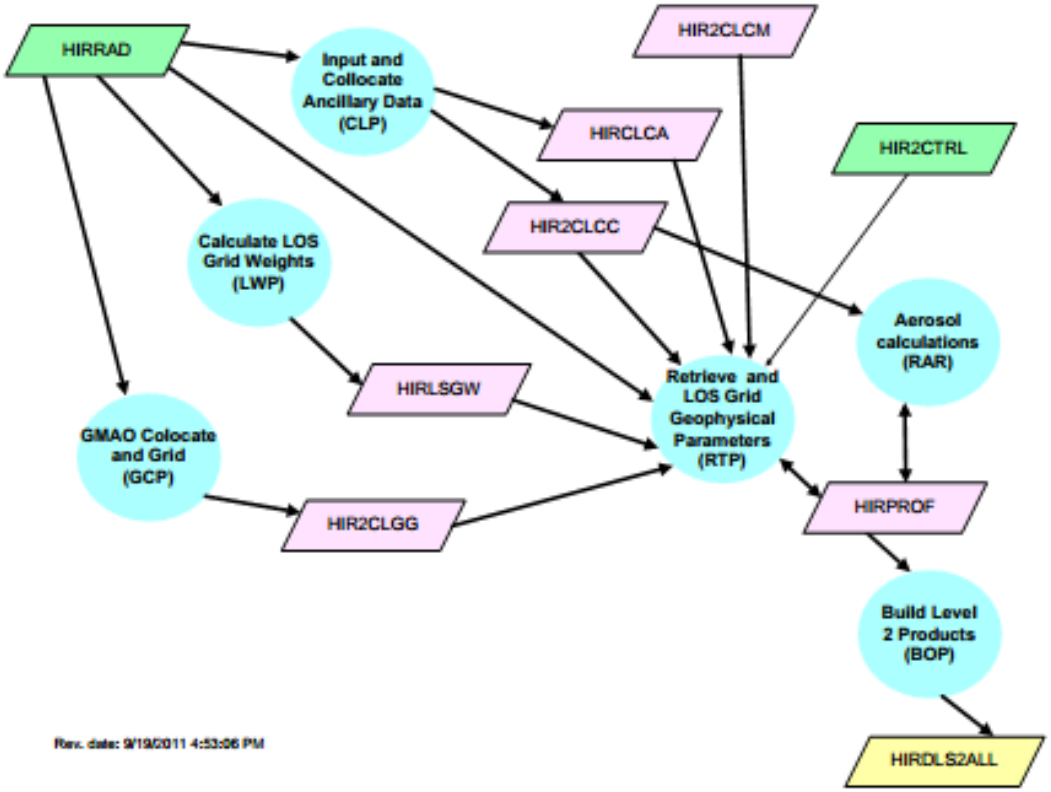
HIRRAD
Input and Collocate Ancillary Data (CLP)
HIR2CLCM
HIRCLCA
HIR2CTRL
HIR2CLCC
Calculate LOS Grid Weights (LWP)
Aerosol calculations (RAR)
HIRLSGW
Retrieve and LOS Grid Geophysical Parameters (RTP)
GMAO Colocate and Grid (GCP)
HIRPROF
HIR2CLGG
Build Level 2 Products (BOP)
Rev. date: 9/19/2011 4:53:06 PM
HIRDLS2ALL